UL VOLTAGE TRANSFORMER (VT)

0.6kV (W · X · M · Y)

UL 인증

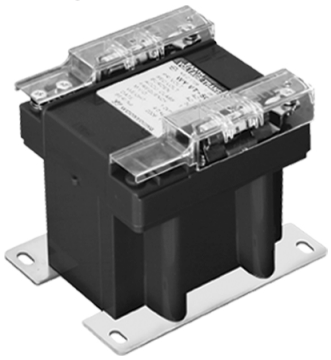

Specifications

- Phase : 1Φ
- UL and cUL Certified per ANSI/IEEE C57.13 Standard / CSA C61869－1:14
- Warranty : 1 year
- Electrical Specifications
- Operating TEMP.& HUM. : -5~30°C & ~85% RH
- Dielectric withstand voltage : Between each terminal & body (4.0kVAC for 1min.)
- Insulation Resistance : Mln. 100MΩ, at 500VDC Megger
- UL Cer. No : E555740

Model	Application	Frequency	Maximum System Voltage	Voltage Rating		ACCURACY CLASS	REMARK
				Pri. [V]	Sec. [V]		
WYVT－50□□UL	Metering	60Hz	0.6kV	60 ~ 600	60 ~ 600	CL 1.2 W, X, M	W : 12.5VA PF0.1 X : 25VA PF0.7 M : 35VA PF0.2 Y : 75VA PF0.85
				60/√3 ~ 600/√3	60/√3 ~ 600/√3		
WYVT－200□□UL	Metering	60Hz	0.6kV	60 ~ 600	60 ~ 600	CL 1.2 W, X, M, Y	
				60/√3 ~ 600/√3	60/√3 ~ 600/√3		

※□□ : F : One Fuse
FF : Two Fuse
Blank : Non－Fuse

Connection Diagram

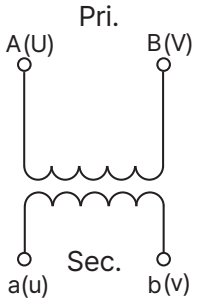

Non－Fuse Type(UL)

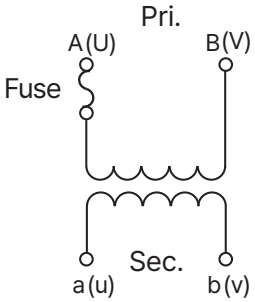

1 Fuse Type(FUL)

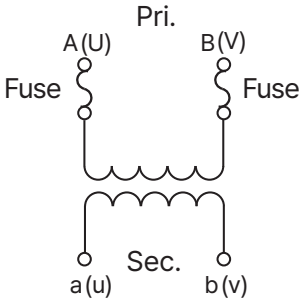

2 Fuse Type(FFUL)

Illustration & Drawing

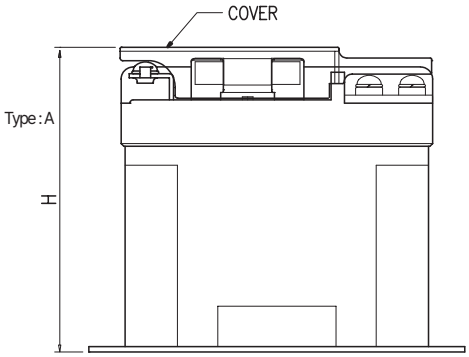

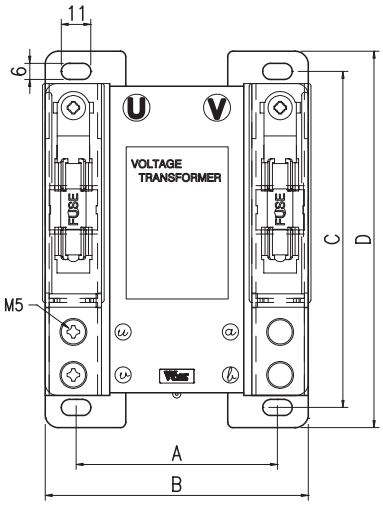

Dimension

unit : (mm)

Model	A	B	C	D	H
WYVT－50□□UL	75	98	125	140	110
WYVT－200□□UL	95	113	125	140	123